CASE FINISH	CURRENT (AMPS)	WORKING VOLTAGE				MAXIMUM DC RESISTANCE (OHMS)	MAXIMUM VOLTAGE DROP		MINIMUM CAPACITANCE (uF)	MIN. INSERTION LOSS PER MIL-STD-220, FULL LOAD, +25°C												
		-55°C TO +85°C		-55°C TO +125°C																		
		AC	DC	AC	DC		DC	AC		14 KHz	30 KHz	50 KHz	75 KHz	100 KHz	150 KHz	300 KHz	500 KHz	1 MHz	10 MHz	100 MHz	1 GHz	10 GHz
SOLDER	3	240	450	240	400	0.03	0.09	--	----	--	--	9	6	14	19	25	--	45	70	70	70	--

PART MARKING:

SCI
51-320-026
DATE CODE

PACKAGE MARKING:

STANDARD

MARKING NOTES:

N/A

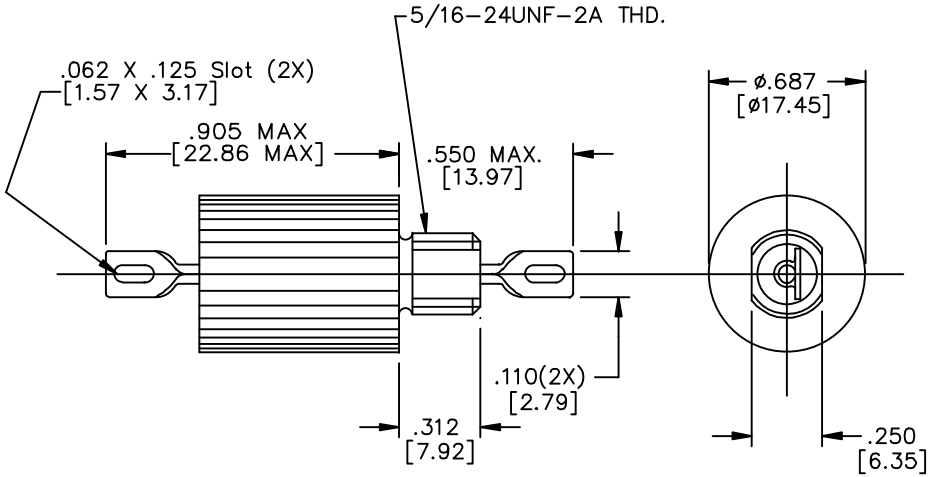

SCHEMATIC

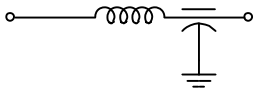

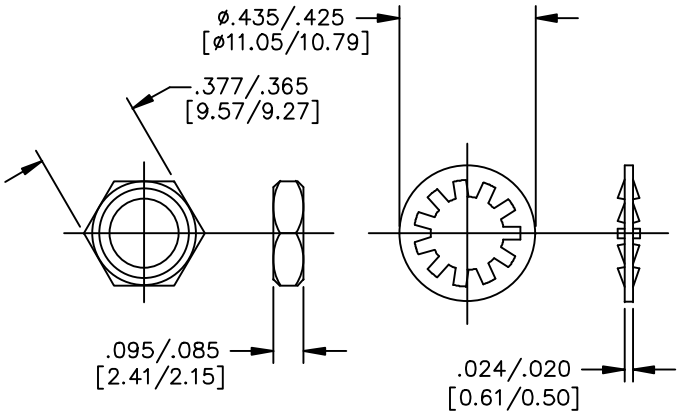

MTG. HARDWARE

NOTES:

1) MOUNTING TORQUE NOT TO EXCEED 7in-lbs.

REV. NO.	CHANGE NOTICE
25	CN. 21912-CPD
24	CN. 202001
23	CN. 183758

UNLESS OTHERWISE SPECIFIED DIMENSIONS ARE IN INCHES. [MILLIMETERS]

THIRD ANGLE PROJECTION

TOLERANCES UNLESS OTHERWISE SPECIFIED
Fractions ±
Dec. .xx±
Dec. .xxx± .010
Angles ±0° 30'

CODE IDENT. NO. OLSP2

SPECTRUM CONTROL INC.

ERIE, FAIRVIEW PENNSYLVANIA

Dwn. MAYNARD
Ckd. 6/11/01
Sheet 1 of 1

Description Low Pass EMI Filter

51-320-026

Quality Products From The Specialists In Electro-Magnetic Compatibility