CASE FINISH	CURRENT (AMPS)	WORKING VOLTAGE				MAXIMUM DC RESISTANCE (OHMS)	MAXIMUM VOLTAGE DROP		MINIMUM CAPACITANCE (uF)	MIN. INSERTION LOSS PER MIL-STD-220, FULL LOAD, +25°C												
		-55°C TO +85°C		-55°C TO +125°C																		
		AC	DC	AC	DC		DC	AC		14 KHz	30 KHz	50 KHz	75 KHz	100 KHz	150 KHz	300 KHz	500 KHz	1 MHz	10 MHz	100 MHz	1 GHz	10 GHz
SOLDER	15	----	200	----	150	0.005	----	--	2.6	--	10	--	--	29	--	39	--	50	60	--	65	--

05

PART MARKING:

SCI-9932-100-6004
DATE CODE

PACKAGE MARKING:

STANDARD

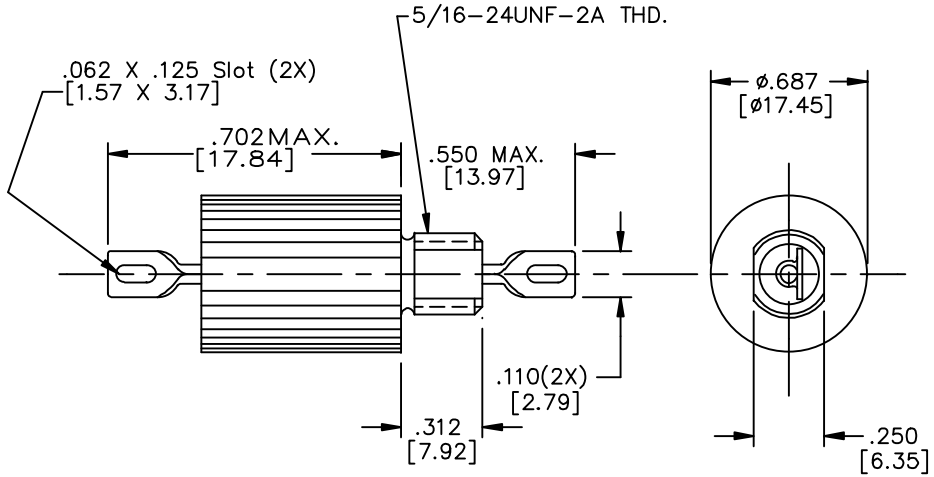

SCHEMATIC

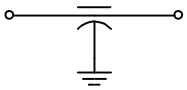

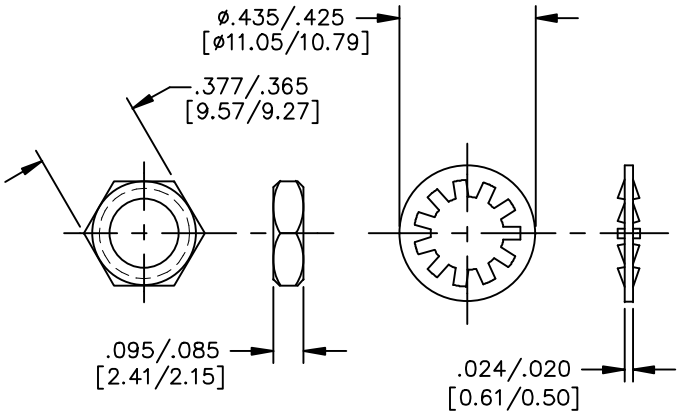

MTG. HARDWARE

MARKING NOTES:

N/A

NOTES:

1) MOUNTING TORQUE NOT TO EXCEED 7in-lbs.

REV. NO.	CHANGE NOTICE
05	CN 40001-ENG
04	CN. 183602

UNLESS OTHERWISE SPECIFIED DIMENSIONS ARE IN INCHES. [MILLIMETERS]

THIRD ANGLE PROJECTION

TOLERANCES UNLESS OTHERWISE SPECIFIED
Fractions ±
Dec. .xx±
Dec. .xxx± .010
Angles ±0° 30'

CODE IDENT. NO. OLSP2

SPECTRUM CONTROL INC.

FAIRVIEW PENNSYLVANIA

Dwn. MAYNARD
Date 2-25-08
Engr. J. KRAUS
Sheet 1 of 1

Description Low Pass EMI Filter

9932-100-6004
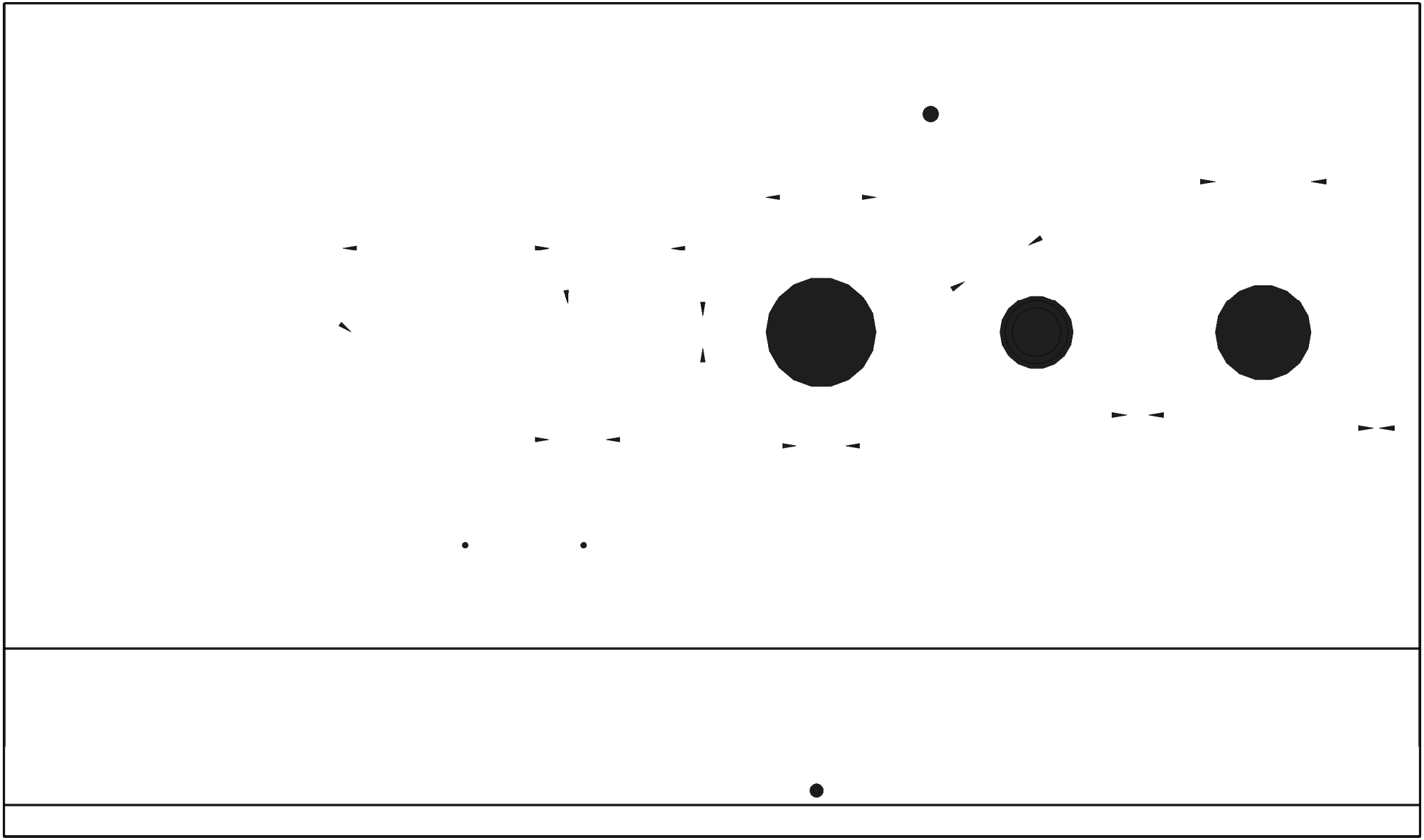
Quality Products From The Specialists In Electro-Magnetic Compatibility