crydom
www.crydom.com

EL SERIES DC OUTPUT

REV. DATE	For Technical Support:
03/10/16	support@crydom.com support-europe@crydom.com

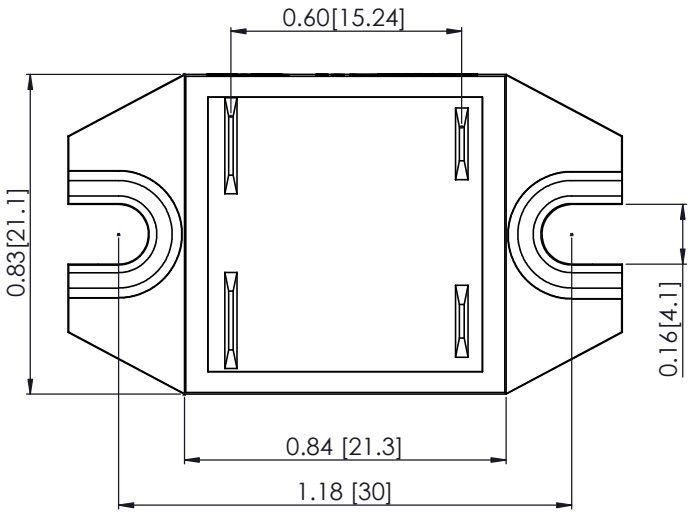

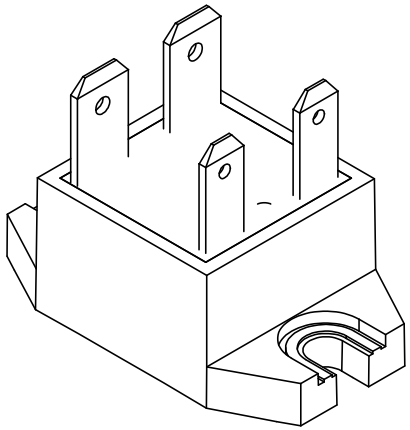

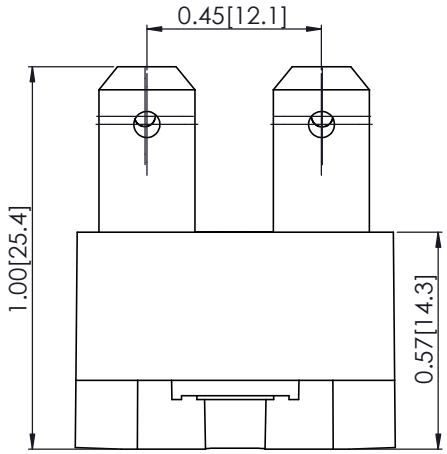

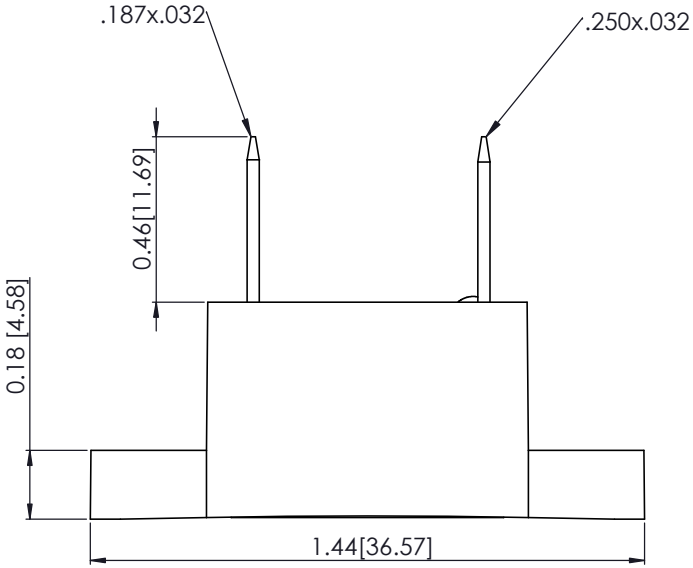

Tolerances: ± 0.02 in / 0.5 mm. All dimensions are in: inches [millimeters]