CASE FINISH	CURRENT (AMPS)	WORKING VOLTAGE				MAXIMUM DC RESISTANCE (OHMS)	MAXIMUM VOLTAGE DROP		MINIMUM CAPACITANCE (uF)	MIN. INSERTION LOSS PER MIL-STD-220, FULL LOAD, +25°C												
		-55°C TO +85°C		-55°C TO +125°C																		
		AC	DC	AC	DC		DC	AC		14 KHz	30 KHz	50 KHz	75 KHz	100 KHz	150 KHz	300 KHz	500 KHz	1 MHz	10 MHz	100 MHz	1 GHz	10 GHz
SOLDER	1	--	--	--	100	0.03	0.20	0.25	--	--	--	--	--	--	11	32	--	63	80	70	70	--

PART MARKING:
M15733/26-0002
1A OLSP2
125 VAC 400Hz
51-353-336
DATE CODE

PACKAGE MARKING:

STANDARD

MARKING NOTES:

N/A

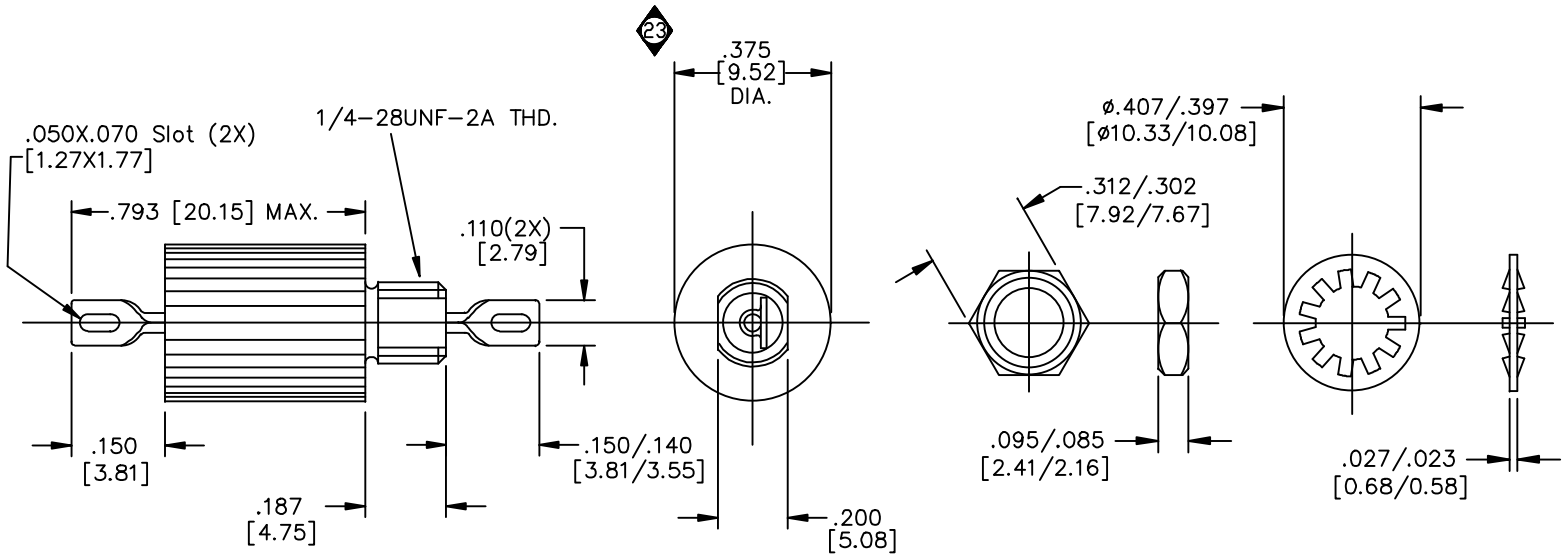

NOTES:
1) MOUNTING TORQUE NOT TO EXCEED 7in-lbs.

REV. NO.	CHANGE NOTICE
23	CN 38679-eng
22	CN 210181
21	CN 186486

UNLESS OTHERWISE SPECIFIED DIMENSIONS ARE IN INCHES. [MILLIMETERS]
DO NOT SCALE.

TOLERANCES UNLESS OTHERWISE SPECIFIED
Fractions ±
Dec. .xx±
Dec. .xxx± .010
Angles ±0° 30'
CODE IDENT. NO. OLSP2

SPECTRUM CONTROL INC.
ERIE, FAIRVIEW PENNSYLVANIA

Dwn. SLAGLE
Ckd. 12-11-07
Engr. J.Kraus
Sheet 1 of 1

Description Low Pass EMI Filter

51-353-336
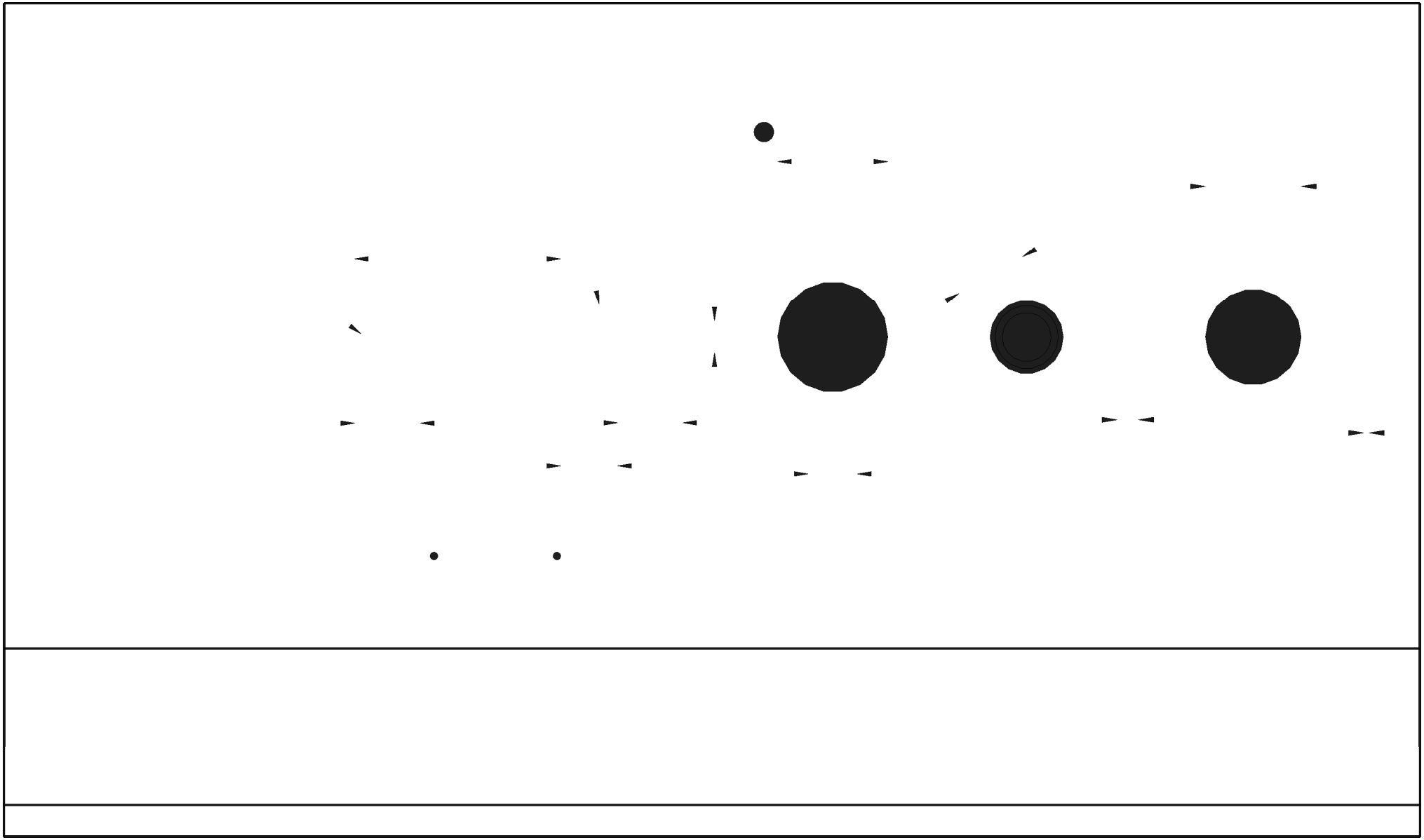
Quality Products From The Specialists In Electro-Magnetic Compatibility