CASE FINISH	CURRENT (AMPS)	WORKING VOLTAGE				MAXIMUM DC RESISTANCE (OHMS)	MAXIMUM VOLTAGE DROP		MINIMUM CAPACITANCE (uF)	MIN. INSERTION LOSS PER MIL-STD-220, FULL LOAD, +25°C												
		-55°C TO +85°C		-55°C TO +125°C																		
		AC	DC	AC	DC		DC	AC		30 KHz	100 KHz	150 KHz	200 KHz	300 KHz	500 KHz	1 MHz	2 MHz	5 MHz	10 MHz	100 MHz	1 GHz	10 GHz
SOLDER	10 43	–	80	–	50	0.005	0.075	–	1.4	15	23	28	32	34	39	44	50	57	60	--	70	--

PART MARKING:

M15733/58-0001
OLSP2 DATE CODE
L 50VDC 10A 125°C

PACKAGE MARKING:

STANDARD

MARKING NOTES:

N/A

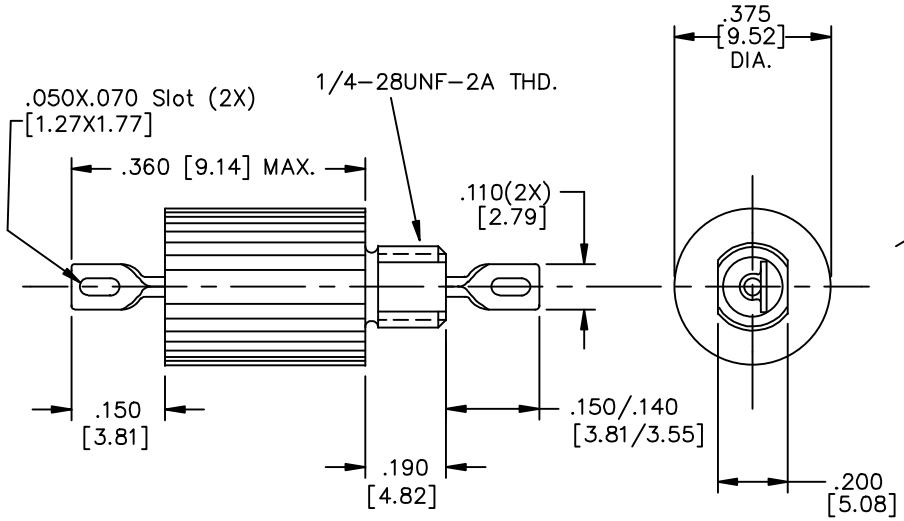

SCHEMATIC

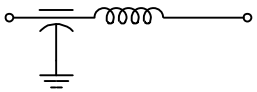

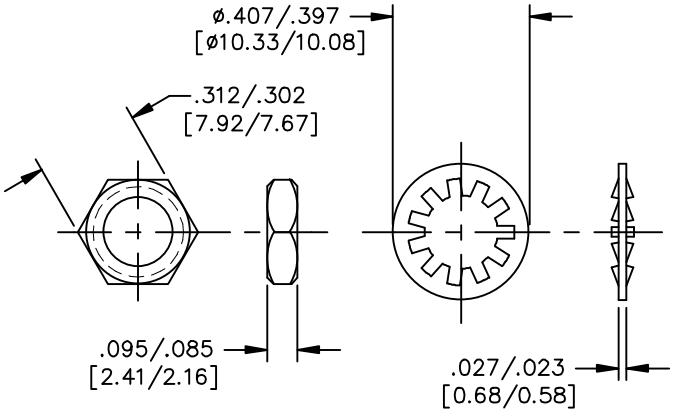

MTG. HARDWARE

NOTES:

1) MOUNTING TORQUE NOT TO EXCEED 7in-lbs.

REV. NO.	CHANGE NOTICE
43	CN 52989-ENG
42	CN. 175989
41	CN. 174995

UNLESS OTHERWISE SPECIFIED DIMENSIONS ARE IN INCHES. [MILLIMETERS]

DO NOT SCALE.

TOLERANCES UNLESS OTHERWISE SPECIFIED
Fractions±
Dec. .xx±
Dec. .xxx± .010
Angles ±0° 30'

CODE IDENT. NO. OLSP2

SPECTRUM CONTROL INC.

FAIRVIEW PENNSYLVANIA

Dwn. KAUFFMAN
Date 2-11-10
Engr. B.DEVINE
Sheet 1 of 1

Description Low Pass EMI Filter

51-359-051

Quality Products From The Specialists In Electro-Magnetic Compatibility