CASE FINISH	CURRENT (AMPS)	WORKING VOLTAGE				MAXIMUM DC RESISTANCE (OHMS)	MAXIMUM VOLTAGE DROP		MINIMUM CAPACITANCE (uF)	MIN. INSERTION LOSS PER MIL-STD-220, FULL LOAD, +25°C												
		-55°C TO +85°C		-55°C TO +125°C																		
		AC	DC	AC	DC		DC	AC		14 KHz	30 KHz	50 KHz	75 KHz	100 KHz	150 KHz	300 KHz	500 KHz	1 MHz	10 MHz	100 MHz	1 GHz	10 GHz
SOLDER	5	--	80	--	50	0.015	0.075	--	2.8	--	--	--	--	18	--	60	--	80	80	--	80	--

PART MARKING:
SCI
9001-100-1080
DATE CODE

PACKAGE MARKING:

STANDARD

MARKING NOTES:

N/A

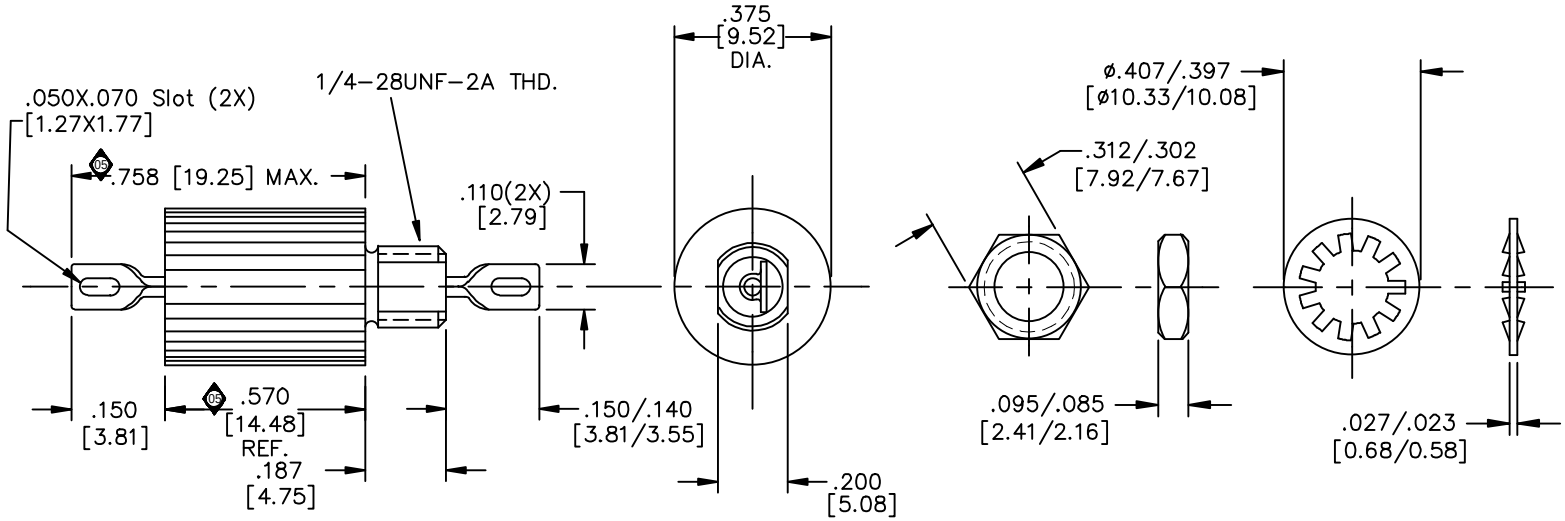

NOTES:
1) MOUNTING TORQUE NOT TO EXCEED 7in-lbs.

REV. NO.	CHANGE NOTICE
5	CN 49009-ENG
4	CN 44110-ENG
3	CN. 183653
2	CN. 159446

UNLESS OTHERWISE SPECIFIED DIMENSIONS ARE IN INCHES. [MILLIMETERS]
DO NOT SCALE.

TOLERANCES UNLESS OTHERWISE SPECIFIED
Fractions ±
Dec. .xx ±
Dec. .xxx ± .010
Angles ±0° 30'
CODE IDENT. NO. 0LSP2

SPECTRUM CONTROL INC.
FAIRVIEW PENNSYLVANIA

Dwn. MAYNARD
Date 9-12-08
Engr McAlevy
Sheet 1 of 1

Description Low Pass EMI Filter

9001-100-1080
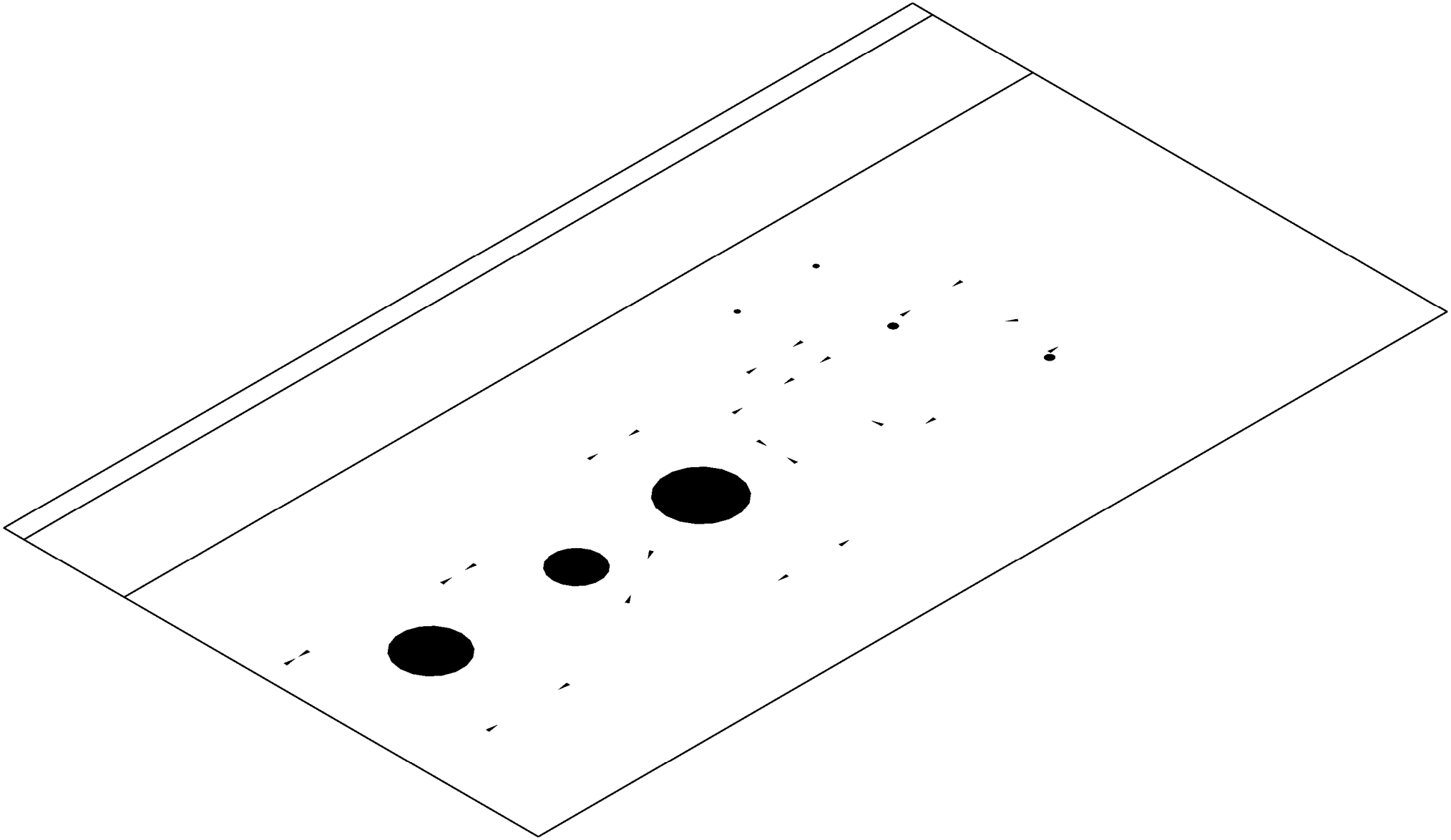
Quality Products From The Specialists In Electro-Magnetic Compatibility