crydom
www.crydom.com

CMXD20 SERIES

REV. DATE	For Technical Support:
11/20/10	support@crydom.com support-europe@crydom.com

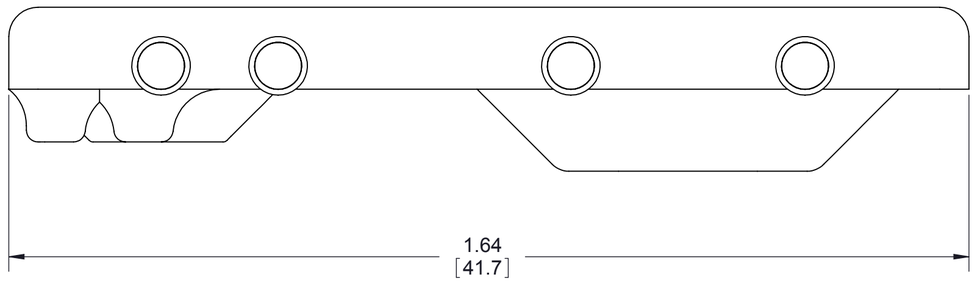

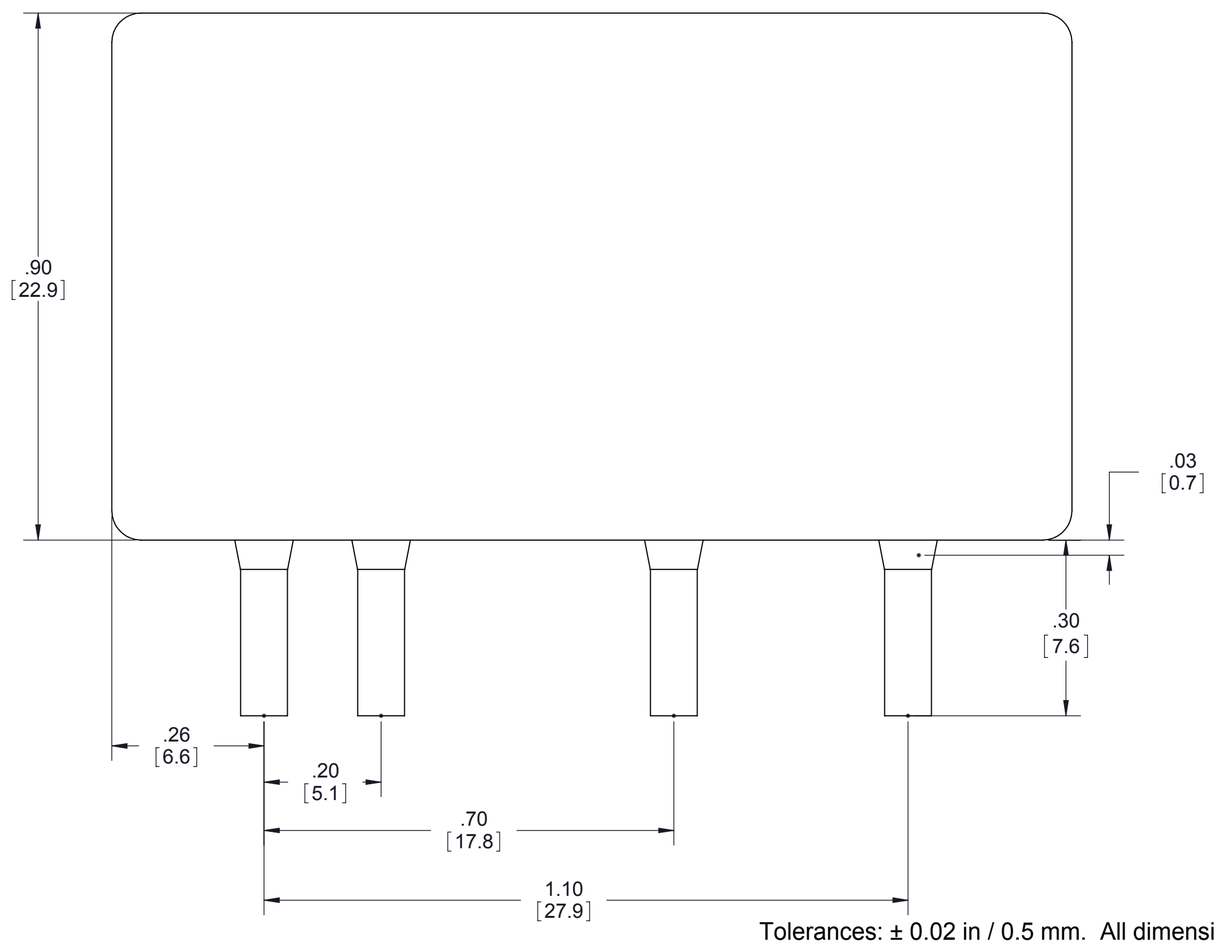

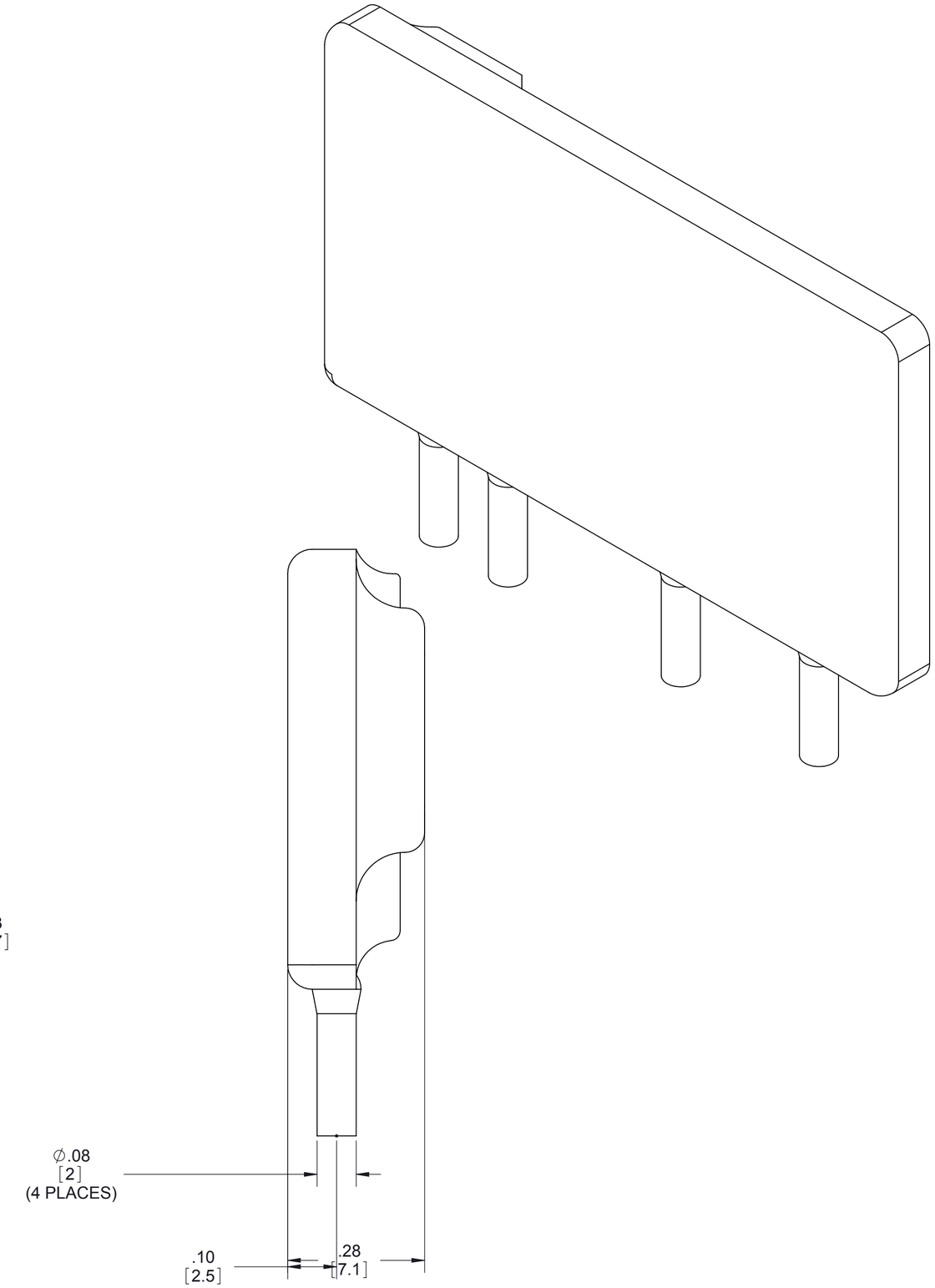

Tolerances: ± 0.02 in / 0.5 mm. All dimensions are in: inches [millimeters]